Options: • Special Springs for specific Cracking Pressures. (5)
• Ball options for Air & Gases. (6)

Pressures: 55 MPa
Working: 40 MPa @ 100°C
10 MPa @ 250°C

Services: Instrumentation and Hydraulic Medias, Liquids and Gases
Steam: 7 MPA @ 400°C

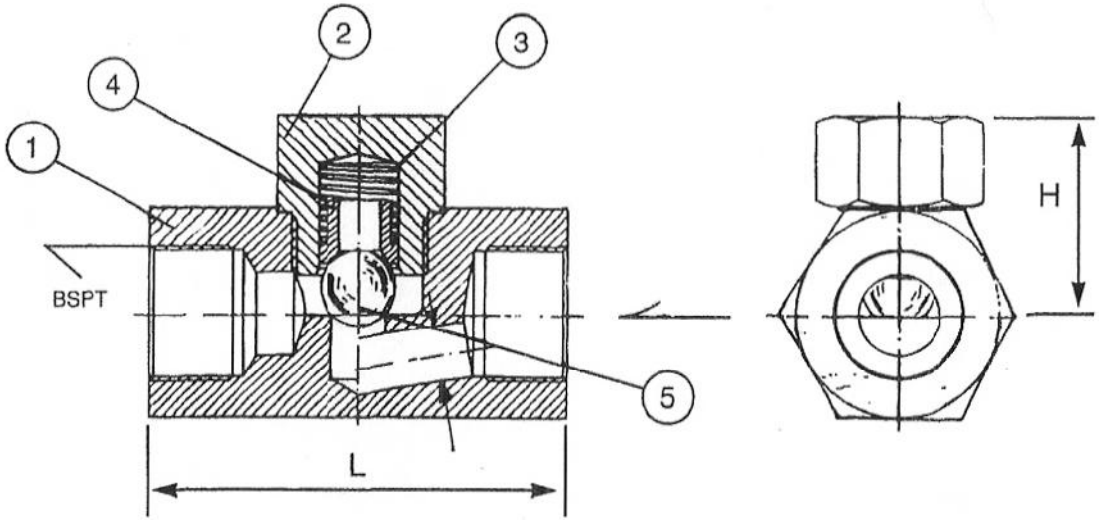

Connections: BSPT (AS1722.1) Std
Options – NPT Threads: Socket Weld: Compression Types

Dimensions

Size mm	8	10	15	20	25	32	40	50	65	80	100
L	51	51	77	82	95	127	127	TBA	•	•	•
H	26	26	26	43	46	56	56	TBA	•	•	•
D	4.8	4.8	6.3	7.5	9.5	17.5	17.5	TBA	•	•	•
Wt/kgs	*0.3*	*0.3*	*0.4*	*0.9*	*1.1*	*4.0*	*4.0*	*TBA*	•	•	•

ITEM	DESCRIPTION	MAT'L	STANDARD
5	BALL – VALVE	STAINLESS STEEL	AISI302
4	SPRING RETAINER	STAINLESS STEEL	ASTM A276 AISI316
3	SPRING	STAINLESS STEEL	JIS64313 GR304
2	COVER	STAINLESS STEEL	ASTM A276 AISI316
1	BODY	STAINLESS STEEL	ASTM A276 AISI316

PVA PROMET VALVES AUSTRALIA
1A Green Road Woodville West SA 5011
www.prometvalves.com promet@prometvalves.com
T: 08 8268 1777 ABN 47096 425 697 F: 08 8268 1711

FIG No
CC894 *STAINLESS STEEL – 50MPa BALL CHECK VALVE*